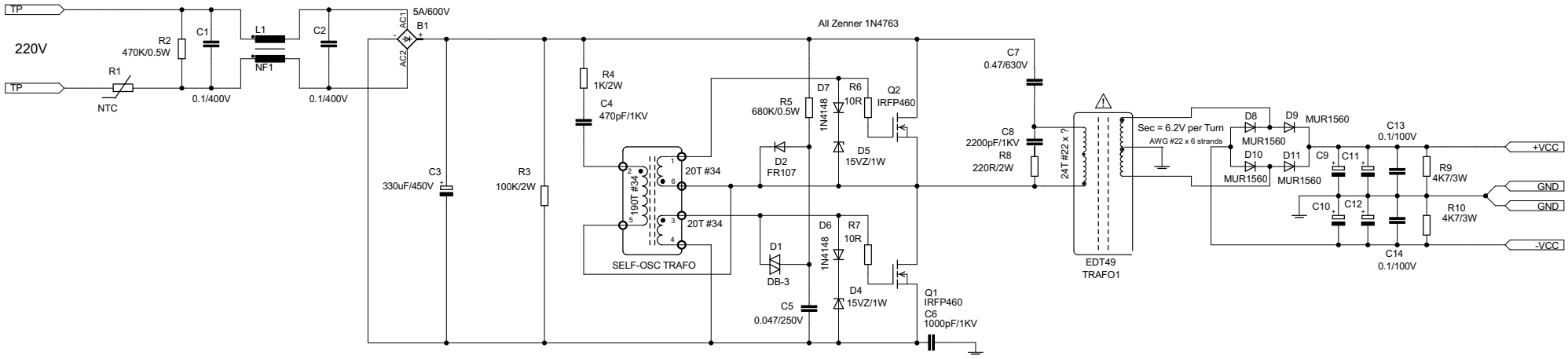
TP
220V
TP
R1
NTC
R2
470K/0.5W
C1
0.1/400V
L1
NF1
C2
0.1/400V
5A/600V
B1
AC1
AC2
C3
330uF/450V
R3
100K/2W
R4
1K/2W
C4
470pF/1KV
190T #34
20T #34
20T #34
SELF-OSC TRAFO
All Zenner 1N4763
R5
680K/0.5W
D2
FR107
D1
DB-3
C5
0.047/250V
D7
1N4148
D6
1N4148
R6
10R
R7
10R
D5
15VZ/1W
D4
15VZ/1W
Q2
IRFP460
Q1
IRFP460
C6
1000pF/1KV
C7
0.47/630V
C8
2200pF/1KV
R8
220R/2W
24T #22 x ?
EDT49
TRAFO1
Sec = 6.2V per Turn
AWG #22 x 6 strands
D8
D9
MUR1560
MUR1560
D10
D11
MUR1560
MUR1560
C9
C10
C11
C12
C13
0.1/100V
C14
0.1/100V
R9
4K7/3W
R10
4K7/3W
+VCC
GND
GND
-VCC