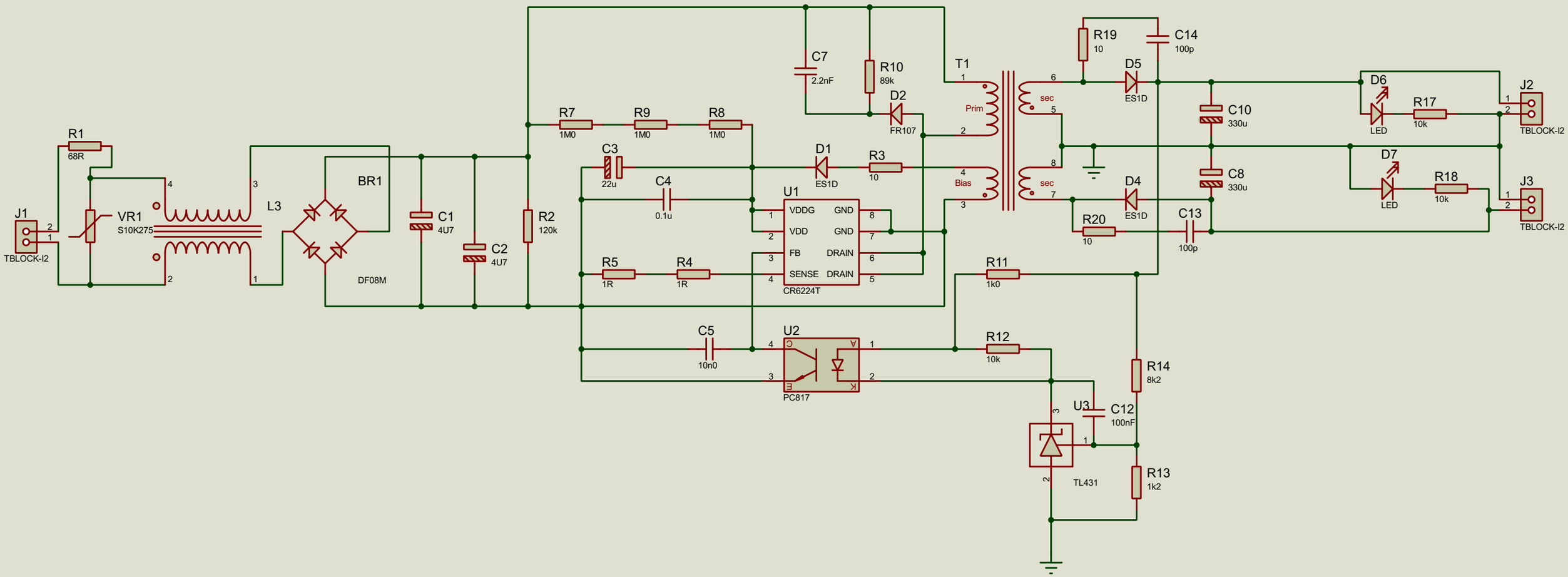
J1
TBLOCK-I2
R1
68R
VR1
S10K275
L3
BR1
DF08M
C1
4U7
C2
4U7
R2
120k
R7
1M0
R9
1M0
R8
1M0
C7
2.2nF
R10
89k
D2
FR107
C3
22u
C4
0.1u
D1
ES1D
R3
10
U1
VDDG
VDD
FB
SENSE
GND
GND
DRAIN
DRAIN
CR6224T
R5
1R
R4
1R
C5
10n0
U2
PC817
T1
Prim
Bias
sec
sec
R19
10
C14
100p
D5
ES1D
D4
ES1D
R20
10
C13
100p
C10
330u
C8
330u
R11
1k0
R12
10k
R14
8k2
U3
TL431
C12
100nF
R13
1k2
D6
LED
R17
10k
D7
LED
R18
10k
J2
TBLOCK-I2
J3
TBLOCK-I2